CNC Plus

Ace Micromatic Group Newsletter

Issue 01 Apr 2018

'ACE'ing it all the way

Ace Micromatic® Group

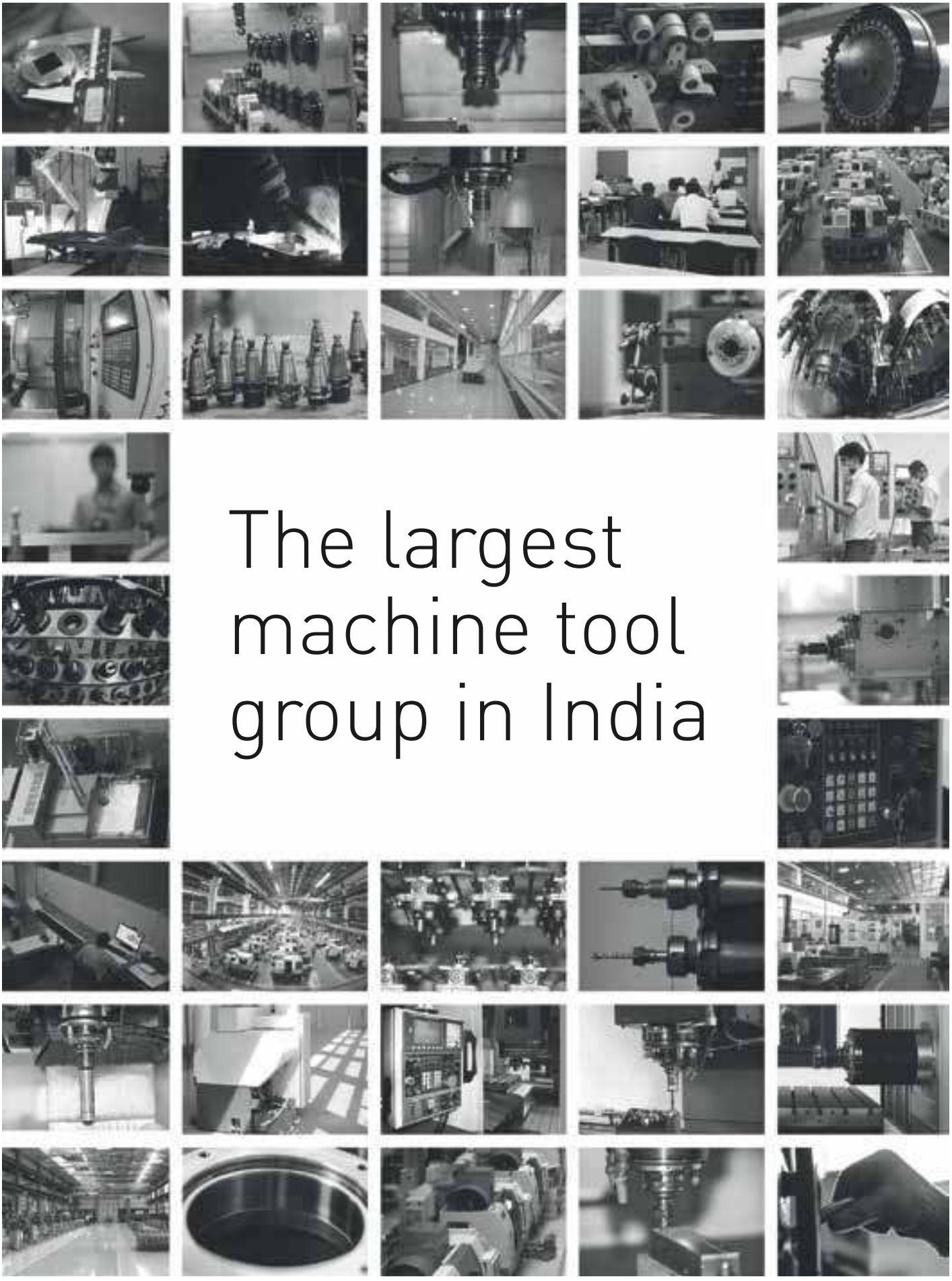

The largest machine tool group in India

ACE DESIGNERS®

TURNING SOLUTIONS

AMS® In Pursuit of Excellence

MILLING SOLUTIONS

Micromatic Grinding TECHNOLOGIES LTD.® Reliable customer friendly grinding solutions since 1973

GRINDING SOLUTIONS

Micromatic®

SALES & SERVICE

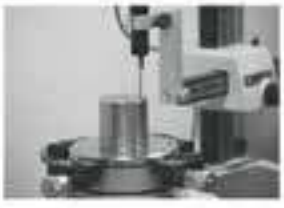

PRAGATI

AUTOMATION SOLUTIONS

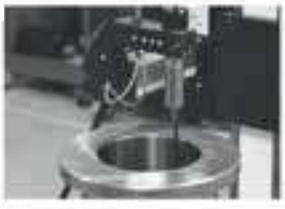

AmiT

INDUSTRY 4.0 & IoT SOLUTIONS

Disclaimer:
Edited, designed and printed on behalf of Ace Micromatic Group.
The design, pictures and content used in this publication are intellectual property of the group unless mentioned otherwise.

No part of this publication may be reproduced or transmitted in any form without the prior written consent of the editor. Efforts have been made to keep the information in this newsletter as correct as possible.
However, the editor cannot be held responsible in case of any discrepancies found in the data. If you have any interesting story/event/contribution to be shared or any questions, please get in touch with the editor at sreekanteswar@acemicromatic.com

Editor:
Sreekanteswar Shankarnarayan

Sub-Editor:
Savitha A Isaac

Design Editor:
Harish M

Content & Design:
Magic Wand
Excellence is a habit!

Printed at:
Pentaplus Printers Pvt Ltd
Bangalore

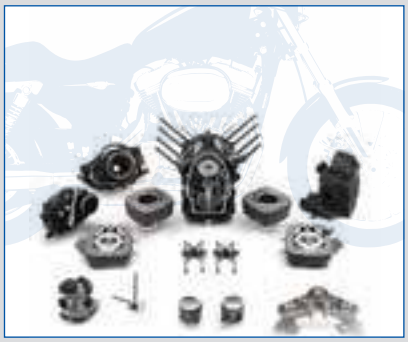

Cover Page:
Ace Micromatic Group has always been consistent in its efforts to offer its best to its valued partners whose unwavering support has made the company's journey to success worth savoring. Their feedback in this edition of CNC Plus acts as a motivational driver for the Ace Micromatic Group to keep innovating on its strength, depicted on the cover and scaling up.

COVER STORY
'ACE'ing it all the way
06

FEATURED COMPANY
SPHOORTI – EQUIPPED WITH THE RIGHT TOOLS
14

MACHINE AUDIT
PROGRAMMING AND BEYOND
18

CASE STUDY
CARBON GRAPHITE BUSHES
22

CSR ACTIVITY
SQUARING IT OFF
23

INNOVATION
RESORTING TO THE UNCONVENTIONAL
24

NEW LAUNCH
SIMPLETURN 60125
VMC-430V
26

NEWS
AMS' NEW FACILITY
28

KYC
SAFEGUARD YOUR GRINDING MACHINE
32

EVENTS
EXHIBITION & CUSTOMER MEET
34

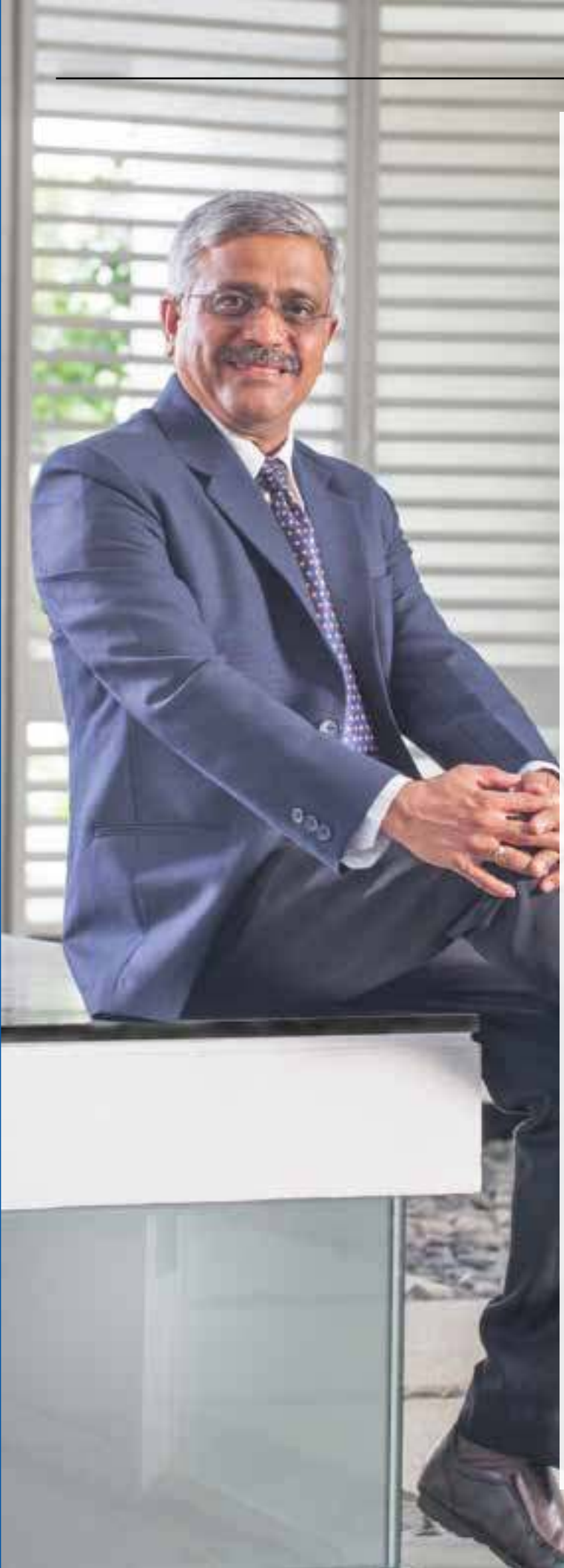

GREAT LEADERS MAKE A DIFFERENCE

A leader, they say, is a dealer in hope. But before proffering this hope, it is imperative that leaders must have a strong belief in the fact that they matter and that they can bring about a positive impact on others surrounding them. Additionally, the important question entailing this firm faith should not be: "Will I make any difference?", rather, "What difference will I make?".

The best leader role models are the local people who are hands on at work. Though a lot of attention is focused on the people at the helm of affairs like founders, CEOs etc. and it may seem as if they are solely responsible for everything that's great and duff about organizations. This, of course, is perpetuated by the trickledown theory of leadership that holds true during the startup days. However, a closer look at mature organizations paints a starkly different picture. The leader who has the most impact on the day-to-day behavior is, in fact, the immediate manager who has the most influence over the actions of people and their commitment to the organization's vision and values.

This means that if you're a manager, to your direct reportees, you are the most important leader in the organization. And leadership is all about the difference you bring to the table.

This is supposedly a 200-year-old true story: A man in civilian clothes rode past a small group of exhausted, battle-weary soldiers digging an obviously important defensive position. The section leader, making no effort to help, was shouting orders, threatening punishment if the work was not completed within the hour.

"Why are you are not helping?," asked the man on the horseback.

"I am in charge. The men do as I tell them," said the section leader, adding, "Help them yourself if you feel strongly about it."

To the section leader's surprise, the man got off his horse and helped the men until the job was done. Before leaving, he congratulated the men for their work and approached the puzzled section leader.

"You should notify the top command next time your rank prevents you from supporting your men and I will provide a more permanent solution," said the man in civilian clothes.

Up close, the section leader now recognized General Washington and also the lesson he'd just been taught.

This edition of CNC Plus salutes such leaders around us who are capable of guiding us in the best possible way and bringing out the best in us. The magazine comprises words of encouragement from our partners in success who keep us motivated to consistently innovate and offer a wide variety of offerings to the industry. The last, but not the least, is an account of our payback to the community whose support has made our journey possible.

T K Ramesh
Whole time Director & CEO
Micromatic Machine Tools

'ACE'ing
it all the way

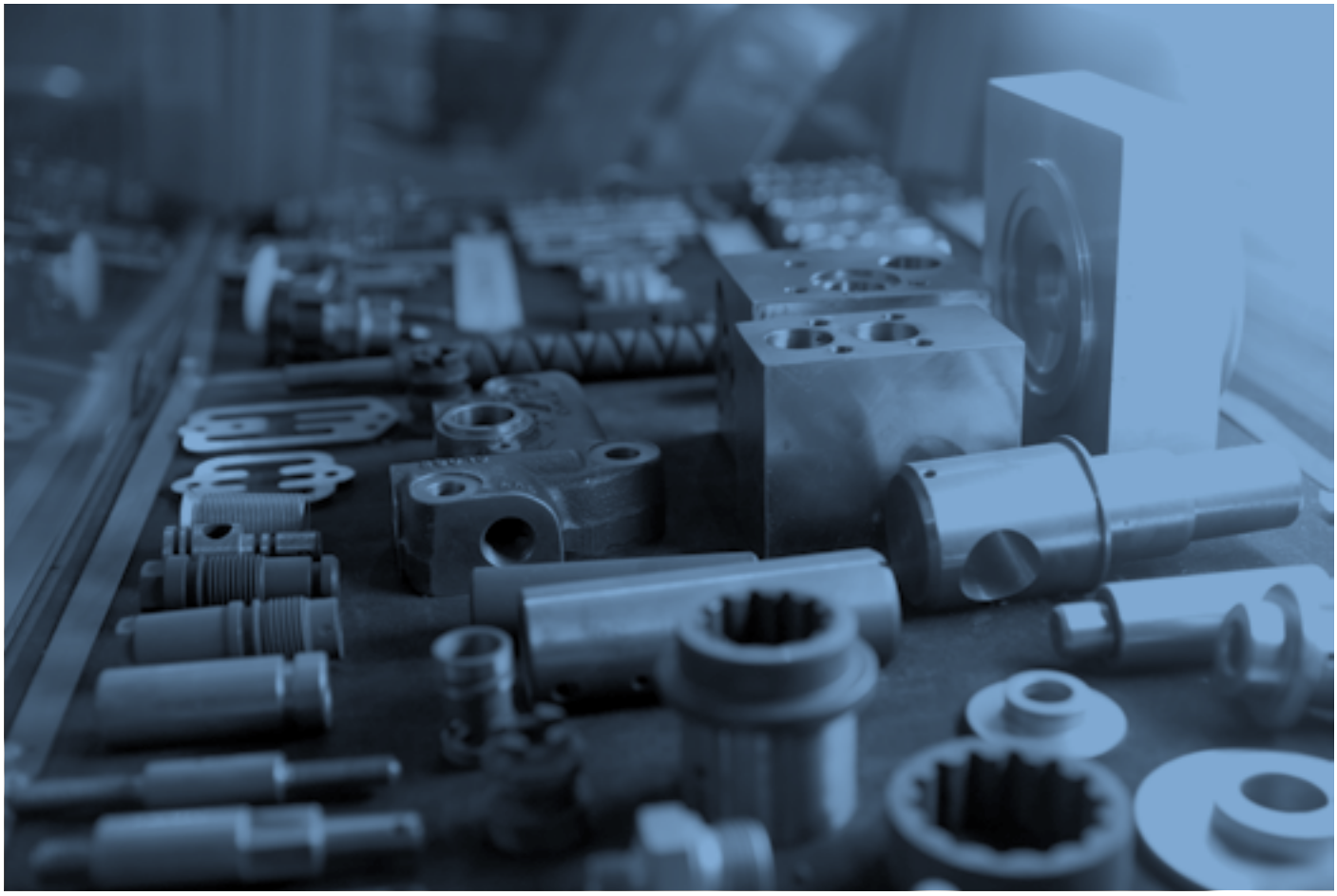

Ace Micromatic Group has, over the years, been living up to its name. In sync with the changing times, it has earned its repute of being a stickler for quality and staying attuned to its customers, paying heed to their needs and extending support at the quickest. The returns are manifest in the Group's massive customer loyalty, a reward that matches none.

The National Capital Region (NCR), which comprises Delhi and several districts of Haryana, Uttar Pradesh and Rajasthan, is dotted with auto component companies in over 50 industrial clusters and contributes 30 percent to the total vehicle production in the country.

North India has historically been a turf for the automotive industry ever since automotive manufacturing began. Gurgaon in Haryana was chosen by Maruti Suzuki India, country's largest car manufacturer, to establish its first plant, which attracted a large number of ancillary companies to the region. The Japanese automobile giant Honda Motor followed suit to set up its two wheeler plant in Gurgaon and a car plant in Noida. The region produces over 30 percent of the cars and 50 percent of two wheelers in India. There is an increase in the number of component manufacturers in accordance with the large number of OEMs.

This spells a favorable situation for Ace Micromatic Group (AMG) whose machines are bought at a rate of knots by the component manufacturers of the region, some being the Group's customers for decades.

"We buy quality machines from quality providers only. We have around a 100 machines from the Ace group. In India, Ace Micromatic Group is the best for Cylindrical Grinding Machines."

Atul Bansal
Director
Bhagwan Precision (P) Ltd

Committed customers

AMG takes pride in its customers who have remained loyal in the face of fierce competition in the market. One of its oldest customers is Jain Industrial Products from Rohtak that currently manufactures auto components and supplies to industries including pump, tractor, bearing, LCV, and four- and two-wheeler. "Our first machine from Ace was bought in 1995, and there has never been looking back," says Saransh Jain, Partner, Jain Industrial Products.

The company has over 130 machines from AMG including smaller to bigger range turning centres and VMCs. The share of Ace machines is 60 percent. "We recently purchased MCV 400 from AMS and have also placed an order for five turning centres with Ace, which is under commissioning," informs Jain.

Bhagwan Precision (P) Ltd has also been Ace's regular customer since 1980s. The company is particular to buy the machines it needs only from reputed manufacturers since it caters to major OEMs such as Hero, Mahindra & Mahindra and Punjab Tractors. It owns around 100 machines including Grinding machines and VMCs from the

group. "We buy quality machines from quality providers only. In India, Micromatic Grinding Technologies Ltd is the best for Cylindrical Grinding Machines," stresses Atul Bansal, Director, Bhagwan Precision (P) Ltd.

Hi-Tech industries owns a total of 60 turning centres from Ace. "In one of our plants there are 24 Ace CNC Lathes out of which 23 are from AMG and 7 VMCs that include four from Ace," says BN Upadhyaya, Director, Hi-Tech Industries. The company is into automotive segment since 2002, manufacturing brakes for four-wheeler segment, clutches and steering system parts for two-wheeler segment. Its clients include Continental Grace and FCC group. Hi-Tech has four more units in Faridabad and is planning for another in Gujarat.

Also, among its list of staunch clients are veterans like Reva Transmission that are in the industry since 1960s. They have seen the industry in its infancy and grown along with it, surpassing challenges and making its mark along the way. The company's first Ace machine was bought in 1976. Today, Reva's 50 percent of machines are from AMG which makes a total of 200.

Acknowledging AMG's strengths

Bajaj Motors is among AMG's prestigious clients that needs no introduction. The auto component giant has machining as well as forging units for making auto components and foundry castings. These are then supplied to its clients that include Hero MotoCorp and Tata. In order to make the various types of components that it specializes in, the company sources CNC machines from AMG.

"Ace Micromatic offers the best service and stays committed. The group has acquired a very good market with its turning centres and grinding machines. However, the sky is the limit. In order to grow further, one needs to acquire the latest in technology and provide excellent accuracy. Since the customer is always right, you need to keep fulfilling his requirements," advises VP Bajaj, Chairman & Managing Director, Bajaj Motors Ltd.

The company has over 2000 machines in its seven plants. Forging is done in two, one plant is for casting and the rest of the plants are for machining. "Out of the total 2000 machines, 200 are sourced from AMG, of which 100 are from AMS," informs Tarun Bhargava, A.V.P – ENGG, Bajaj Motors Ltd, who has been with the company since its inception.

"Ace Micromatic offers the best service and stays committed. The group has acquired a very good market with its turning centres and grinding machines. However, the sky is the limit. In order to grow yet further, one needs to acquire the latest in technology and provide excellent after sales service. Since the customer is always right, you need to keep fulfilling his requirements."

VP Bajaj
Chairman & Managing Director
Bajaj Motors Ltd

Service support

AMG's clients are unanimous when it comes to its after sales support. "The downtime is very less in Ace machines. And if there is, the company's personnel are keen to solve the problem without any delay," notes Jain. He is upbeat about the fact that AMG now has a service centre in Rohtak too. "It was really great of AMG to provide its clients in Rohtak the support and service they need urgently," he adds.

Jain Industrial Products has witnessed a whopping 10 to 12 percent productivity increase after using AMG machines. "In J 300 machines, AMG provides machine connect solutions. So, we can monitor the production on our laptop after each hour. The hour in which the efficiency drops, we can call the operator and check the lapse. This has led to the increase in the productivity," says Pankaj Jain, Director, Jain Industrial Products.

More accolades for AMG

SunMax Auto Engineering Pvt Ltd commends Micromatic Machine Tools Pvt Ltd for the service that it makes available to its customers. "AMG provides that rare personal touch. It welcomes inputs and does not push machines if they are not suitable for you. Its service structure is ideal. These are the small things that make a lot of difference. That is one of its success mantras, I suppose," says Sumit Suneja, Managing Director, SunMax Auto Engineering, Gurgaon.

The company produces 30,000 components a day and owns 60 AMG machines to make transmission components. Its other products include sheet metal components and two wheeler components like main stand, side stand and carrier.

"The industry has encountered major changes post Hero and Maruti. Previously, quality was not that much of a focus. Now the scene has changed, so have the qualitative and quantitative requirements of customers."

Vijay Pal Bansal
Managing Director
Bhagwan Precision (P) Ltd

"Ace Micromatic provides that rare personal touch. It welcomes inputs and do not push machines if they are not suitable for you. Its service structure is also very good. These are the small things that make a lot of difference."

Sumit Suneja
Managing Director
SunMax Auto Engineering Pvt Ltd

AMG's after sales support is one of the prime reasons that Bhagwan Precision prefers the group of companies over its competitors. "We hardly need any support for AMG's machines and when we do, the service engineers come within 24 hours," says Vijay Bansal.

Upadhyaya seconds: "I appreciate Micromatic Machine Tools for its prompt service; the engineers come to your aid as soon as you need them. The spare parts are also timely available, which minimizes our break down hours. So, whether it be sales or support, AMG's reponse is favourable."

"I appreciate Ace Micromatic for its prompt service; the engineers come to your aid as soon as you need them. The spare parts are also timely available, which minimizes our breakdown hours."

BN Upadhyaya
Director
Hi-Tech Industries

"This is the most competitive industry in the entire world. Prices are pushed down every year for all OEMs. Despite all that, we need to survive, for which we must innovate."

Tarun Bhargava
A.V.P - ENGG
Bajaj Motors Ltd

"Ace is definitely moving towards the upgradation of technology and features in its machines. After having added new features in Ace static turning centres, it is now making sliding headstock machines. Its machines are in accordance to the times, as well as the needs of its customers."

Pankaj Jain
Director
Jain Industrial Products

Innovate to sustain

"This is the most competitive industry in the entire world. Prices are pushed down every year for all OEMs. Despite that, we need to survive, for which we must innovate," says Bhargava.

And innovate AMG does, and how! The companies in the group are aligned to their customers' needs and the ever-changing trends in the local and global markets. This becomes imperative to assure their as well as AMG's well-being.

"AMG is definitely moving towards the upgradation of technology and features in its machines. After having added new features to Ace CNC turning centres, it is now making sliding head-stock machines. Its machines are in accordance to the times, as well as the needs of its customers," says Pankaj Jain.

According to Upadhyaya, the last five years have witnessed focus on automation. "This is basically to reduce or eliminate manpower, which has always been an unresolved issue. And also to decrease cost." The company has been working on that along with Ace regarding autofeeding systems. It's planning for four such machines.

Trends – then and now

Reva is the best candidate to comment on this, having witnessed the industry's ever-changing trends since 1960s. "People have become quality conscious and the prices have come down. It's a game of volume now. When volumes increase then price gets adjusted. The industry is suffering from a cut-throat competition," says Bharat Raj Goel, Managing Director, Reva Transmission.

According to Suneja, the two-wheeler market segment is shifting aggressively to scooters. The reasons being better roads and more girls riding the scooter. "Already 30 percent market share has gone to scooters, and by 2020 it will be 40 percent," he adds. Such a scenario requires higher and better production capabilities at a cheaper cost, which is the main customer demand these days. This calls for innova-tive machinery.

"People have become quality conscious and the prices have come down. It's a game of volume now. When volumes increase then price gets adjusted. We combine some products. The industry is suffering from a cut-throat competition."

Bharat Raj Goel
Managing Director
Reva Transmission

"E-mobility is definitely the future. The cost could be high, but the customer needs to understand its benefits. It's said that the next would be hydrogen. We just have to keep pace with the changing needs."

Vikas Bajaj
MD & CEO
Bajaj Motors Ltd

"It's not just us, but our customers also rely on Ace Machines. Since when they see our components and their quality, they know that it's Ace machines that have delivered that. Nowadays, a lot of machine tool vendors from countries such as China and Taiwan are in the market. If we compare their machines with Ace, then Ace is definitely far better."

Saransh Jain
Partner
Jain Industrial Products

Trends of the bygone days paved way for what we see today. And the emerging needs of today are ushering in changes for the future. The industry is united to welcome e-mobility and is all geared up to make room for the changes and innovate to fit in.

"If I don't innovate and don't move towards e-vehicle components, it's a threat for me. If I try to find something that can be used in e-vehicles then it's an opportunity," says Suneja.

e-vehicles will dictate tomorrow's transportation and the industry, along with Ace Micromatic Group, is upbeat and eager to be in sync with the changing times, since "change is the only constant". CNC+Plus

We extend our heartfelt thanks to our customers for their support and valuable contribution to our magazine:
Bajaj Motors Ltd, Reva Transmission, SunMax Auto Engineering Pvt Ltd, Hi-Tech Industries, Jain Industrial Products, Bhagwan Precision (P) Ltd

CNC+Plus
Ace Micromatic Group Newsletter

Subscription Form

PERSONAL DETAILS:

NAME: _____

DESIGNATION: _____

COMPANY: _____

ADDRESS: _____

_____ **CITY:** _____ **PINCODE:** _____ **STATE:** _____

CONTACT: _____ **EMAIL:** _____

Dear reader, if you wish to receive upcoming issues of CNC Plus newsletters, Kindly fill in the above form and mail to: **Micromatic Machine Tools Pvt. Ltd.** No. 240/241, 11th main, 3rd phase, Peenya Industrial area, Bangalore 560058. P: +91 80 4020 0555

Feature Company

EQUIPPED WITH THE RIGHT TOOLS TO SUCCEED

As a leading manufacturer of turret tool discs and tool holders for CNC turning machines, Bengaluru-based Sphoorti Machine Tools is among the most trusted names in those supplying to the machine tool industry of the country. With the state-of-the-art facilities producing products of the times and customer satisfaction as its primary goal, the company is armed with all the requisites to win. Know more...

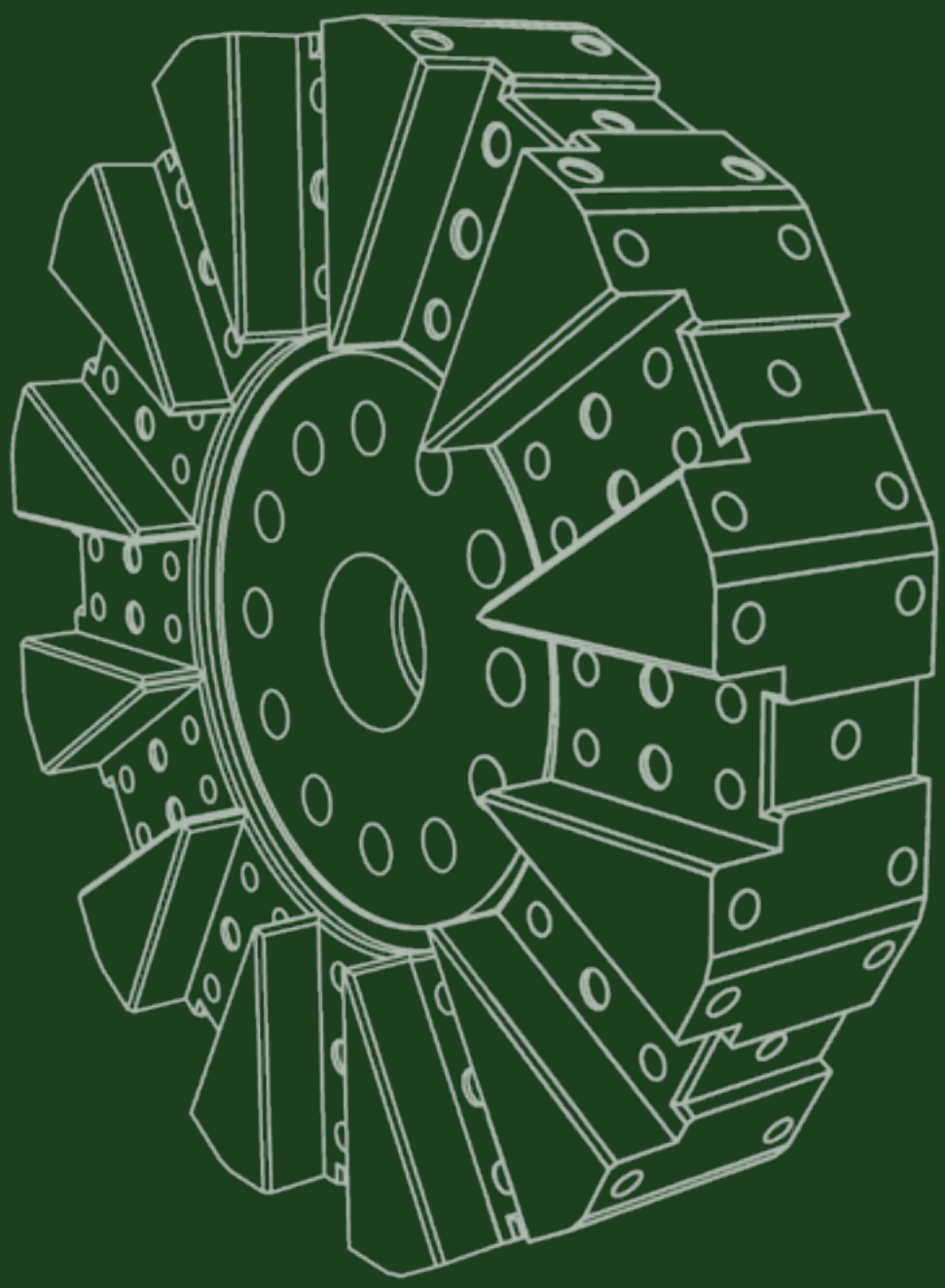

Sphoorti Machine Tools Pvt Ltd is a name to reckon with in the industry. Founded in 1996, it has come a long way and, today, commands a distinguished position by being consistently abreast of the current needs of the market and ensuring it fulfils them promptly.

Operating out of its state-of-the-art 3,000 sq mt machine shop in Bengaluru, the company excels in producing machine tool accessories including turret tool discs and tool holders of graded quality of international standards for CNC turning centres and turn mill centres.

Keeping pace with the changing times

Sphoorti Machine Tools has been steadfastly working towards realizing its vision of attaining global leadership in machine tool accessories and achieving a sales turnover of ₹100 crore by 2020.

To this end, the company stays attuned to the customers' changing needs and keeps upgrading its products with the latest technology available. Recently, it added a new range of products, which consists of various types of driven or live tool holders, making Sphoorti the sole manufacturer of such holders in India. It also has ultra-modern equipment and manufacturing facilities to produce such high-precision products.

Knowing driven tool holder

With a Turn Mill Centre, the manufacturer can do the operations of turning, drilling, milling and tapping in one set-up. This leads to reduction in the total time required for completing the job.

A driven tool holder is one of the most important accessories used in such machines. Using these holders on Turn Mill Centres, machine parts which require several operations can be produced using only one set-up. These tool holders can be easily fitted into the tool disc of the turret having the capacity to run a driven tool, as shown in Figure 1.

Benefits of using Turn Mill Centres along with Driven Tool Holders

In the earlier method, the flat portion and the slots of VDI Tool Holder were machined on a VMC using two different set-ups. On the Turn Mill Centre, it is possible to do both operations in a single set-up.

- The initial investment is reduced (20 to 25 percent cheaper than separately buying a CNC and a VMC).
- Less requirement of space.
- Since the Turn Mill Centre will be operated by one person only, there is a saving of manpower. Running two machines would have required two persons.
- The material handling of the component within the workshop is reduced.
- Since the component is produced by clamping it only once, excellent precision is achieved.
- Reduction in cycle time.
- There is no need for additional set-ups, fixtures and tooling.

P Sekar
Managing Director
Sphoorti Machine Tools Pvt Ltd

Figure 1

The driven tool holder itself is a precisely machined equipment. In fact, it is a machine tool spindle on a small scale. Its rotational speed can be raised up to 6,000 rpm. The development process of this tool holder has been going on for about three years. It has newly developed spindle structure and assembly. A very high degree of precision is expected from the machine parts of the driven tool holders. Keeping this in mind, the company has purchased precision machines like Hermle VMC and Harding's CNC Hard Turning machine necessitating heavy investment. Along with that, it has also purchased Carl Zeiss CMM, the set-up required for the measurement of quality and dimensional accuracy. It would not have been possible to achieve the expected quality standards without all this investment (Figure 2, 3 and 4). Sphoorti has also established a special assembly area and testing rigs to achieve world-class quality comparable with world standards. A typical structure of the driven tool holder is shown in Figure 5.

Figure 2

The tool holders are normally classified as follows:

Figure 6

Axial Tool Holder
In this type, the axis of the tool is parallel to the spindle axis of the Turn Mill Centre while drilling and milling (Figure 6).

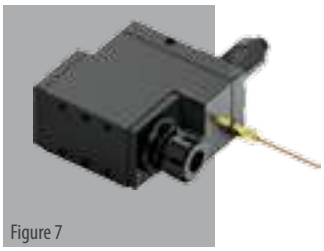
Figure 7

Radial Tool Holder
In this type, the axis of the tool is perpendicular to the spindle axis of the Turn Mill Centre while drilling and milling (Figure 7).

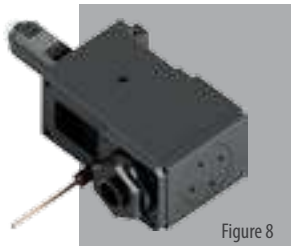
Figure 8

Double End Tool Holder
This is used in the Twin-Spindle or Sub-Spindle type of Turn Mill Centres. One can use a single holder to do machining on both the spindles. The axis of the tool is parallel to the spindle axis (Figure 8).

Figure 9

Adjustable Angular Head Tool Holder
In this type, drilling and milling can be done in a specific angle (Figure 9).

Figure 3

Figure 4

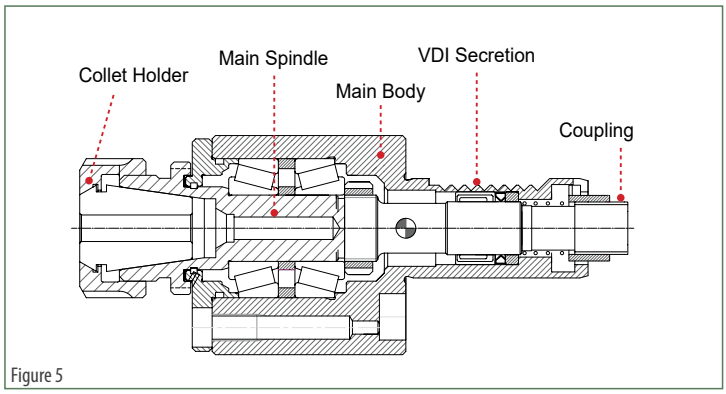

Figure 5

Axial Tool Holder
These may also be classified according to the type of shanks of the holders (Figure 10).

Figure 10

VDI Type
The shanks of this holder are made as per DIN 69880 standards.

BMT (Base Mounted Pulley)
This is a recent development in the Turret Tool Disc Design. It is more rigid and accurate.

Figure 11

Moreover, there are several types of drive couplings which match with the Turret Drive Couplings.
For example: DIN 5480, DIN 5482 and DIN 1809 (Figure 11).

A stickler for quality

The quality department of Sphoorti Machine Tools has sound inspection facilities like ZEISS CMM with other standard inspection equipment to inspect the precision tool discs and tool holders. For vertical storage, the company uses Italy-make Modula to save on floor space and increase its overall productivity. To obtain cylindricity within 1 or 2 microns, roundness measuring machine, Talyrond from Taylor Hobsons is used for higher accuracies. To add aesthetic value to its products, Sphoorti has a blackening plant that renders jet black color to its products. CNC+Plus

We thankfully acknowledge the contribution of P Sekar, Managing Director, Sphoorti Machine Tools Pvt Ltd. To know more contact us: connect@acemicromatic.com

PROGRAMMING AND BEYOND TO PRODUCE QUALITY COMPONENTS

An insightful read on how to achieve component profile during manufacturing so as to match the drawing.

Generally, the programmer who programs for spherical turning uses TNRC (Tool Nose Radius Compensation) in the program to compensate for the insert nose radius to produce component profile as per the drawing.

Left compensation: G41

Right compensation: G42

Cancelled by: G40

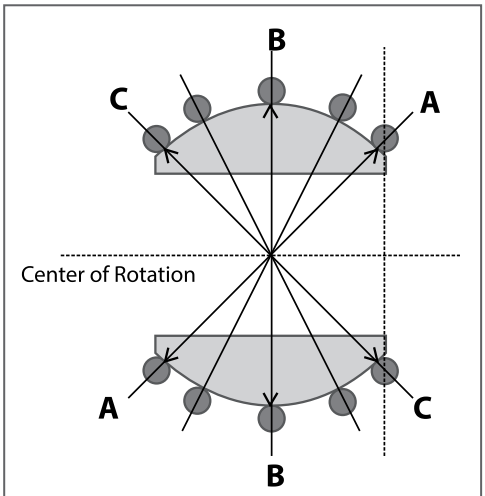

AA, BB, CC = Ball diameter

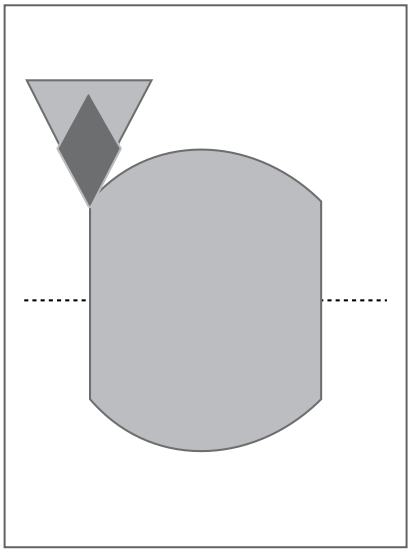

To achieve the desired quality (roundness) of spherical ball or socket turning, machine setter must focus on the following:

X – offset

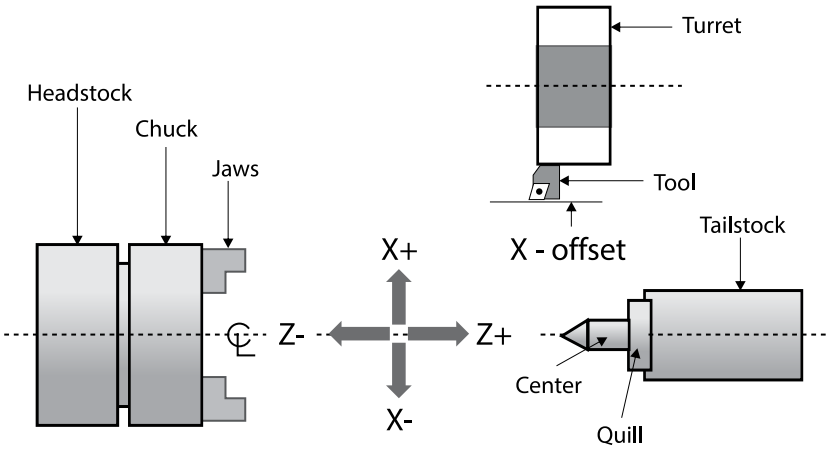

Must be taken perfectly

- This helps to control Dia BB on a spherical ball.
- The centre falls exactly on the rotation centre of the spindle.
- As the tool wear X wear offset must be adjusted.

TNRC

To maintain the profile as per the drawing and to maintain diameters AA & CC = BB

Note:

- The radius of the insert used may not be the exact size as labelled on it. It has tolerance as per the manufacturers.
  This error will affect the diameter BB & CC.
- This will not produce the round ball.
- To overcome this, we need to use R wear correction to make the ball perfectly round. Wear value may change from ± 0.02 mm to ± 0.08 mm.
- As the insert wears, nose radius increases. It requires to adjust by R wear in wear offset page.CNCPlus

Example: Turning a Dia 50 Spherical ball

- TO2121 • N1 G0 G21 G28 U0 W0 • T0101
- G97 S2000 M3 • G0 X100.0 Z15.0 M7 • X32.379 Z3.0
- G1 G42 Z0 F0.2 • G3 X32.379 Z-38.1 R25.0 F0.15
- G1 Z-40.0 • G0 G40 X100.0 M5 • G28 U0 W0 M9 • M30

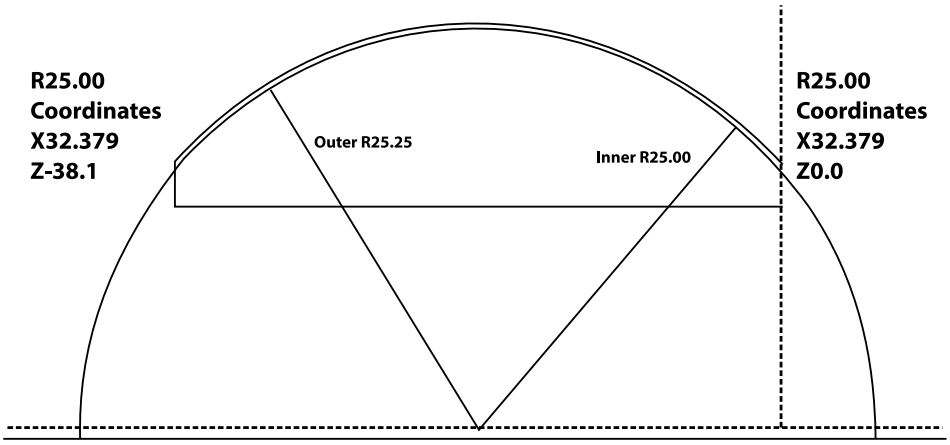

We thankfully acknowledge the contribution of Kashinath Patnasetty. To know more contact us: connect@acemicromatic.com

Dear Customers - Thank you!

You enabled us to surpass many incredible milestones in 2017-18. With your continued support and partnership, we will relentlessly innovate to provide you the best machines & services.

30% GROWTH Y-O-Y

2000 CRORES GROUP TURNOVER

5800 CNC MACHINES DESPATCHED

ACE DESIGNERS® | AMS® In Pursuit of Excellence | Micromatic Grinding® TECHNOLOGIES LTD. | Micromatic® | PRAGATI | AmiT

The Largest Machine Tool Group in India

Case Study

TREATING **CARBON GRAPHITE BUSHES** SPECIALLY

Self-lubricating carbon graphite bushings are ideal for applications where normal lubricants give up, making them unique even to manufacture.

Carbon graphite bushes are used in pump shafts as bearings. They provide self-lubrication as is the characteristic of graphite, and also longer running life. Since carbon graphite bush is very brittle in nature, Critical To Quality (CTQ) requires specialized tooling wherein the force used for clamping is required to be balanced, i.e. ensuring zero damage to the ground bush, yet maintaining roundness accuracies that are retained even after de-clamping of the part from the machine.

Micromatic Grinding Tools (MGT) has engineered and developed suitable workholding for such precision graphite bush bearings, achieving higher level of accuracies as required and also low cycle time which is suitable for high production and economical grinding cost per part.CNCPlus

Result achieved	
Machine	CNC Internal Grinder IG 50 CNC
Operation	Bore Grinding
Grinding Stock	0.3 mm on dia
Grinding Time	32 sec including dressing
Cycle Time	55 sec including dressing
CpK	> 1.68 for tolerance of 30 microns
Roundness	Within 2 microns
Cylindricity	Within 3 microns
Surface Roughness	Within 0.37 µRa

CSR Activity

SQUARING IT OFF

Micromatic Machine Tools believes in the philosophy of giving back to the society which has been instrumental in its growth. The company has been initiating projects such as WINS (Washrooms in Schools) that aim to bring in improved sanitation and hygiene in schools, contributing enormously to the health and overall well-being of children.

Micromatic Machine Tools' (MMT) project in the quaint little hill station of Lonavala, a town near Pune, is yet another attempt to pay back to the community it is operating and flourishing in. The town is an attractive tourist destination for the affluent in Pune and Mumbai who come flocking over on weekends. Though the tourism has helped in gaining employment to a certain extent, the underprivileged locals still suffer from what most poor in the country do.

Hence, to help improve their standard of living, MMT's Pune branch undertook building washrooms and an extra classroom to accommodate children in Gavaliwada LMC School. Successfully led by Prashant Deshpande, Business Head (Project Leader) and executed with sincere efforts from the team members – Aju Joseph (Leader), Nitin Ahire, Digvijay, Ashok Putekar, Shantaram and Anthony Pinto, the project commenced in August 2016 and saw the light of day in March last year.

The students now have washrooms that have adequate water and sewage system, and an added classroom to provide them the comfort they rightfully deserve. CNC+Plus

RESORTING TO THE UNCONVENTIONAL

In order to boost productivity of its most famous product and gain the most sought after competitive edge, Ace Designers Ltd, the largest manufacturer of CNC lathes in the country, took a new approach. Read on to learn about the revamping it brought to the product's manufacturing and assembly, and the radical results thereafter.

Flow line assembly of Jobber CNC lathes.

R Prabhakar
Chief Operating Officer
Ace Designers Ltd
rp@acedesigners.co.in

In line with its vision of being a 'Large Scale producer of World Class Turning Machines', Ace Designers Ltd, the flagship company of the ₹15 billion Ace Micromatic Group, manufactures its most popular model—the Jobber. This model is a standard 2-axis CNC lathe with just enough features that can be used in Small & Medium Scale 'Job Shops'. However, in the past five years, many domestic manufacturers benchmarked this machine and this model became the most copied one. At this point, R Prabhakar, Chief Operating Officer, Ace Designers, and his engineers from the High Volume Machines division decided to implement a radical change, internally referred to as 'Half-Day Indexing'.

Setting itself apart

In the mid-1990s, Ace Designers transformed the assembly of Jobber machines from the conventional method of 'fixed point' assembly to 'flow line' assembly. Flow line is nothing but an assembly on a conveyor line where the product, as it is assembled, moves from one station to another. The 'Takt' time was eight hours or one day indexing. This award winning concept was operational since then, but the increased competition and price pressure drove the team into further improving the Takt time. The target given by one of the Managing Directors of Ace Designers was to change the Takt time to four hours Indexing or 'Half Day Indexing'

The Jobber XL CNC lathe has been the highest selling model in the country.

Before and After Half Day Indexing

Measurement Parameters	Before	After
Number of stations	8 stations	8 stations
Takt time of the flow line	8 hours	4 hours
Space saved	2644 sq ft for 25 machines per month	2644 sq ft for 50 machines per month
Increase in turnover	₹ X	₹ 2 X
Number of times material handled	3	2
Assembly capacity per line	25 machines per month	50 machines per month
Flexibility of line	One line one model	One line 4 models
Manpower per line	21 members for 25 machines	24 members for 50 machines

within a deadline of six months. The prerequisites set were—no shortcuts in the established processes, the new method should be process driven, no deterioration of end product quality and the project had to be done on the very latest Jobber Elite series machines. Incidentally, this machine was awarded the prestigious 'India Design Mark' by the India Design Council.

Accepting this challenge, Prabhakar put together a Cross Functional Team from Product Design, Engineering Methods, Assembly and Procurement. Some of the major challenges faced by the team was to have a buy-in from the assembly team on the floor, to make them believe that it was achievable and not lose focus on the market needs of the product that was undergoing continuous improvements, supply chain support and complete reconfiguration of material storage and logistics.

Targets achieved

To reduce the actual assembly time, many of the activities that were being done on the assembly floor were eliminated through design changes on the components so that those operations were done on components prior to assembly. The biggest challenge here was to have interchangeability so that end accuracies or performance of the product was not compromised. This activity took the longest time as every minute step of the assembly was reviewed and re-established. The major steps involved in this period were Assembly Layout redesign, Component redesign, Time study, Design and Use of correct Power tools, Fixtures and other Mechanical, Electrical and Electronics gadgets. After intense and focused implementation effort, the line became operational. Since the results obtained were quite impressive, the research paper presented by IIM-B Team on this project was published by Harvard Business Publishing. CNC+Plus

We thankfully acknowledge the contribution of R Prabhakar, Chief Operating Officer, Ace Designers Ltd. To know more contact us: connect@acemicromatic.com

New Launch

430V

The all new 430V is a small and compact BT-40 Vertical Machining Centre with an ergonomically designed structure for better rigidity.

Benefits of the 430V:

- The rigid and compact VMC has convenient chip disposal.
- It is cost-effective and is suitable for milling applications also.
- The VMC has a magazine capacity of 20 tools in BT40 size.

Brief Specifications:	
Table Size/Pallet size	650 x 310 mm^2
Max. load on table	250 kgf
Travel X/Y/Z	400/300/400 mm
Tool shank type	BT-40
Spindle speed	8000 rpm
Spindle bearing dia	60 mm
Rapid Traverse	36/36/36 m/min
Number of tools	20
Chip to chip time	3.3 / 4 sec
Tool change system	Twin arm
Spindle power	5.5 / 3.7 kW
CNC control	0iMF Fanuc
Floor space	1600 x 2000 mm^2
Height	2350 mm
Weight	2100 kgf

SIMPLETURN 60125

Most suited for large components like the wheel hub, the flatbed CNC lathe, SimpleTurn 60125 is quite popular with job shops, and small and medium enterprises.

Key features:

- Its bed is of double wall construction.
- The turning diameter is of 600 mm and the turning length is over a meter.
- All geared headstock comes with automatic gear shifting.
- It has a hydraulic tailstock.
- The induction motor for the spindle has variable frequency drive.
- Ball screw spring cover.
- A Flatbed CNC lathe with a turning dia of 600 mm & turning length of over a meter.CNCPlus

ACE MANUFACTURING SYSTEMS INAUGURATES NEW FACILITY

The end of the last year spelled a new beginning in the remarkable journey of Ace Manufacturing Systems Ltd with the addition of a new production facility in Peenya, Bengaluru.

Source: Ace Micromatic

P Ramadas, MD, AMS & President, IMTMA (extreme left), along with industry leaders at the inauguration of the company's new facility in Bengaluru.

Ace Manufacturing Systems (AMS), an Ace Micromatic group company, has set another benchmark for the industry by creating an additional production facility that ensures to increase its production capacity from 1200 to 3000 CNC machining centres per annum, thus making it the largest facility in India for machining centres.

Aiming higher

AMS has come a long way from producing three machining centres in 1994 out of its small premises to the current 3000 from its existing 10-acre plot in Peenya. With its new facility the company aims of producing 10,000 and then to 30,000 machines per year.

The addition of the facility stems out of the need to fulfil the surge in demand for machine tools including horizontal machining centres (HMCs). "With increased production capacity, this new facility, built at a cost of ₹80 crore, has the capacity to build large-sized horizontal machining centres. A portion of this space is dedicated for automated turnkey solutions," said P Ramadas, Managing Director, Ace Manufacturing Systems & President, Indian Machine Tool Manufacturers' Association (IMTMA).

"We are proud to announce that many of our VMCs, Twin spindle machining centres and HMCs are producing precision components for some of the best automotive manufacturers globally such as Daimler Group, Jaguar Land Rover Group, Bentley, Maserati, BMW, Volvo, etc. We are investing in stronger processes to enhance our productivity and efficiency. We are running on SAP for all our internal processes," he explained.

The group aims to become a leading machine tool manufacturer in the world with its machines finding application in bevy of industries like automobile, die & mould, aerospace, medical and dental equipment manufacturing. It also caters to government sectors like engineering, defence industries and energy. Now with its new building fitted with high-technology amenities, AMS will surely get there.

The inauguration

The facility was inaugurated in the presence of leading Indian automotive groups and was attended by the dignitaries from the automotive industry including Viji Santhanam, Managing Director, Brakes India Group; VN Vijayaraghavan, Managing Director, I M Gears; Dr M Manickam, Chairman, Sakthi Automotive Group; Gautam Maini, Managing Director, Maini Precision Products; R S Zanvar, Chairman, Shriram Foundry – Zanvar Group; G Parthipan, CEO, Rane TRW Steering Systems; Kohari San, Member of the Board, FANUC Corporation Japan; and Steven Y Pai, Chairman, Precision Motion Industries, INC (PMI Taiwan). Directors of Ace Micromatic Group—AV Sathe, Chairman, Ace Designers & Pragati Automation; SG Shirgurkar, Managing Director, Ace Designers; and B Machado, Managing Director, Ace Designers—also graced the occasion with their presence.

Salient features of the new facility:

Multistore machine
assembly facility
first of its kind in the
country

Paint shop (lower +ground+ first):
2160 sq mt
(23,000 sq ft)

Additional
2400 machines / year
assembly capacity
(existing 1200 / year)

Building enclosed by glass windows with louvers systems for the natural light and air circulation

Assembly shop (ground + first + mezzanine):
16,100 sq mt (1,68,000 sq ft)

Split building by 4 m
(12 feet) for natural air circulation and direct sunlight

16 & 14.5 m wide bays to
facilitate assembly of
bigger size machines

5 ton lift for
material movement

Tunnel pathway for the
employees' movement

Anti-dust
U CRETE
floorings

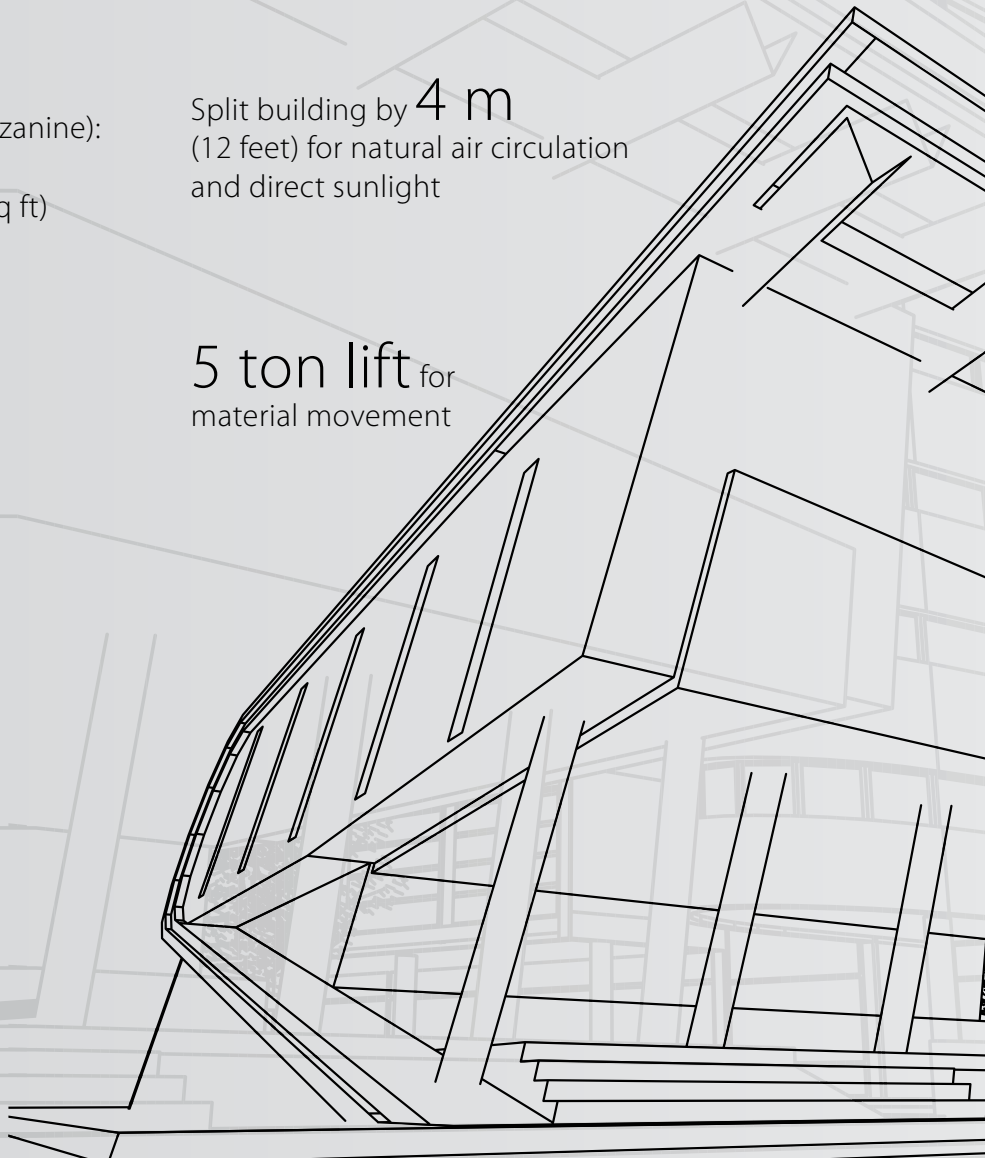

Planter boxes in the split gap for garden and cut-outs to ensure direct sunlight to basement

13 passengers
capacity see-through lift

BBT (Bus Bar trunking) systems for the electrical power supply

10 ton
Scissors lift for Machine movement

First floor double-layered roof with
Gravent systems
for heat ventilation

High-rise KARDEX systems for material storage

75 EOT cranes
and semi portal for m/c and materials movement

Rain water harvesting tank of
18 lakh ltr
water capacity

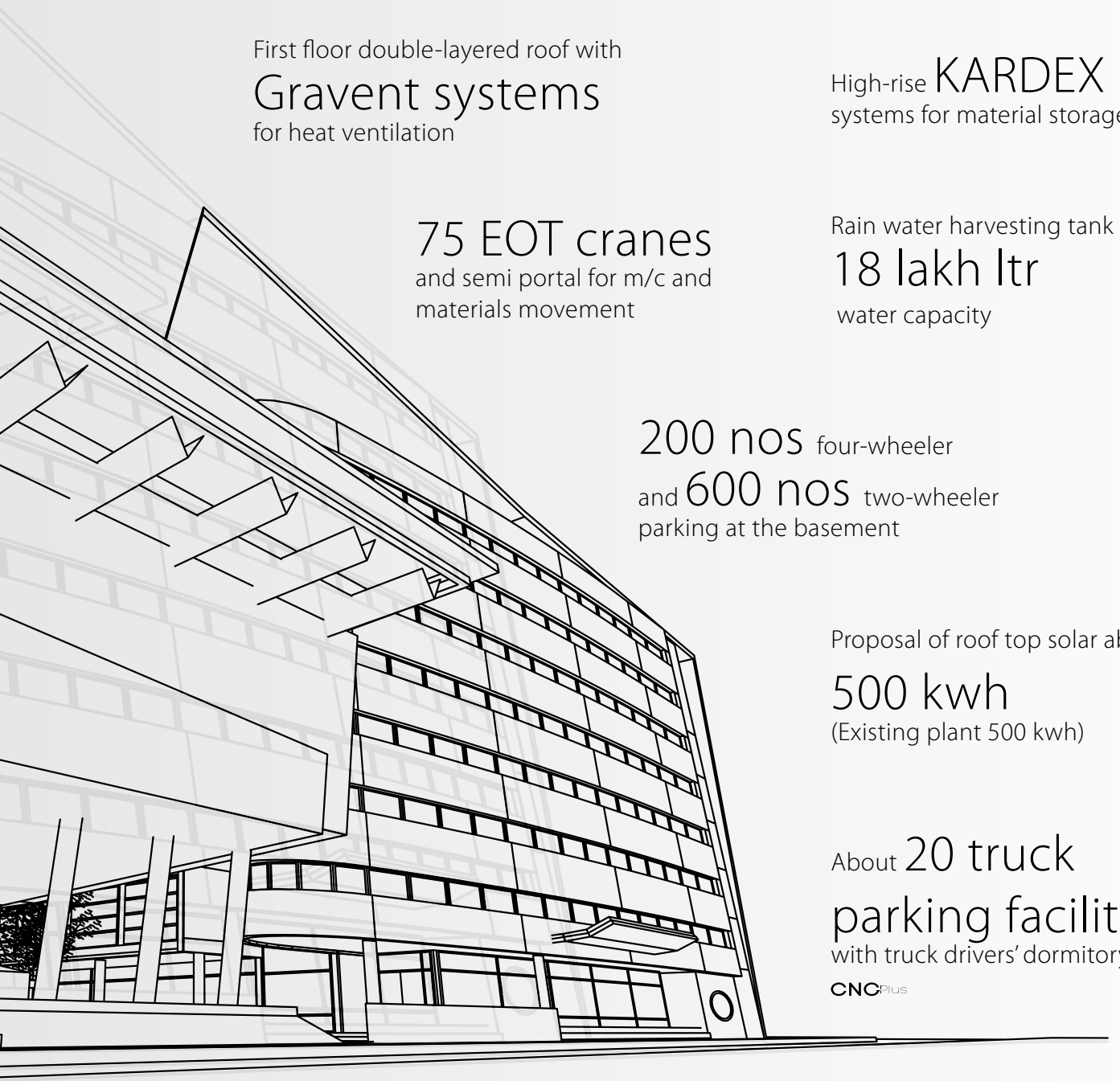

200 nos four-wheeler
and 600 nos two-wheeler
parking at the basement

Proposal of roof top solar about
500 kwh
(Existing plant 500 kwh)

About 20 truck
parking facility
with truck drivers' dormitory

SAFEGUARD
YOUR GRINDING MACHINE

Always use, confirm, monitor and maintain

DOING THIS	PREVENTS	LEADS TO
SAFETY & ELECTRICAL SUPPLY:		
• Four pole ELCB of rating 30mA tripping current	Leakage current	No electrical shock and no electronic, CNC package failure
• 415V Phase to Phase voltage	Electrical and electronic parts failure	Increase in machine reliability
• Dedicated earthing with neutral to earth leakage < 3V and resistance of <100 Ω	Transfer of leakages causing electrical shocks	Safety of human and machine
• Make sure the AC temperature is maintained as per the requirements	Failure of electrical and electronic components	Increase in machine reliability
MACHINE ENVIRONMENT:		
• Dust, moisture, standing water, liquid and rain free environment	Machine and machine elements getting affected	Increase in machine reliability
• Non-exposure of machine and CNC to direct sunlight or other heat sources	Overheating of machine and machine elements	Increase in machine reliability
• Machine foundation as per recommendation	Vibration of machine, rejection of components & reduction of tool life	Better accuracies on grinding parts. Improves cp/cpk

DOING THIS	PREVENTS	LEADS TO
PNEUMATIC SUPPLY TO MACHINE:		
• Dry air and required air pressure as per recommendation	Moisture entry to pneumatic elements and other machine elements	Increase in machine reliability
• Compressor with recommended capacity of volume and pressure	Interruption in machine operation and machine down time	Increase in machine reliability
• Maintain the air pressure on different areas of machine	Interruption in machine operation and various functions	Increase in machine reliability
SPINDLE AND AXES LUBRICATION:		
• Use of spindle oil		
• **Spindle** — **Oil grade**	Spindle over heat and spindle failure	Increase in the reliability of wheel head and work head spindle
• Work head — Servo spin 12		
• Work head — Servo spin 12		
• Work head oil level	Friction inside the spindle assembly	Increase in spindle life and better grinding accuracies
• Wheel head oil level and flow in sight glass	Friction inside the spindle assembly, insufficient lubrication flow into the spindle bearing	Increase in machine reliability/increase in spindle life/enhancing better accuracies on grinding output
• Table oil level and flow in sight glass	Guide ways friction, rusting and axis jerking	Increase in machine reliability
• Recommended carriage / table, lubrication oil / grease (Oil-Servo way 68 / isoflex NBU 15 grease)	Prevents guide ways friction, rusting, axis jerking, scoring marks wear and tear on guide ways and turcite	Increase in machine reliability
COOLANT PROPERTIES:		
• Use of non-synthetic coolant, water-based emulsion	Coolant taking away of lubrication oil	Better lubricity, reliability of parts and machine
• Concentration of coolant 7% to 9%	Heating of machined parts and cutting tool	Better tool life, quality of components and reliability
• Use DM water for mixing the coolant oil	Rusting of machine elements, peeling of paint, skin allergies	No harm to humans, increase in the corrosion resistance of raw material and paint, and extension in sump life of coolant
• **Properties** — **DM Water** — **Coolant**		
Hardness — <200 ppm — 550 to 600 ppm		
• Chloride — <25 ppm — <50 ppm		
• pH — 7 — 7.5 to 9		
HYDRAULICS & GUIDE WAYS LUBRICATION:		
• Servo way H 68 grade oil	Interruption in machine operation in various functions	Increased machine uptime
CLEANING AND REPLACING AS PER RECOMMENDATION:		
• Machine external and internal	Collection of grinding mug and sludge	Maintaining cleanliness of machine
• Filter - Hydraulic, Pneumatic, Cabinet, AC and Coolant	Interruption in machine operation during various function and clogging of filters	Increased machine reliability and uninterrupted machine operation. CNC Plus

We trust that you have found the above details useful and wish to assure you that compliance will help your team to ensure better reliability and machine uptime. If you need any further assistance, please do not hesitate to contact our local service support.
Email: customercare@acemicromatic.com | www.acemicromatic.net | To know more contact us: connect@acemicromatic.com

EXHIBITION
DOMESTIC & INTERNATIONAL

Events

Metalex 2017
Organiser: Reed Tradex Co., Ltd
Venue: Bangkok, Thailand
Date: Nov 22–25, 2017

Ace Micromatic Group garnered rave response from its customers in the South Asian region during Metalex 2017. The trade exhibition and conference is the most important gathering of ASEAN metalworking community. The platform is ideal for new networks and new ideas and to inspire industrialists to optimize their competitive advantages.

Engimach 2017
Organiser: K And D Communications
Venue: Gandhinagar, Gujarat
Date: Dec 06–10, 2017

Engimach in Gandhinagar is an international trade fair for machine tools & engineering and one of the largest fairs of its kind in India. The 13th edition of the biennial event offered the best from ACE's stable: CNC Turning Centre, CNC Machining Centre, CNC Grinder, Real-time OEE, Smart, Manufacturing IoT & Industry 4.0 solutions, to name a few.

MachAuto Expo 2018
Organiser: Udan media and Communications Pvt Ltd
Venue: Ludhiana, Punjab
Date: Feb 16–19, 2018

MachAuto Expo focuses basically on the latest in technology in Engineering Machinery, Machine Tools, Auto Parts, Hand Tools, CNC Machines and SPMs, Automation Technology and many more. The 7th edition of the expo saw active participation from Ace Micromatic Group that exhibited its CNC Turning Centres, Real-time OEE, Smart Manufacturing, IoT and Industry 4.0 solutions.

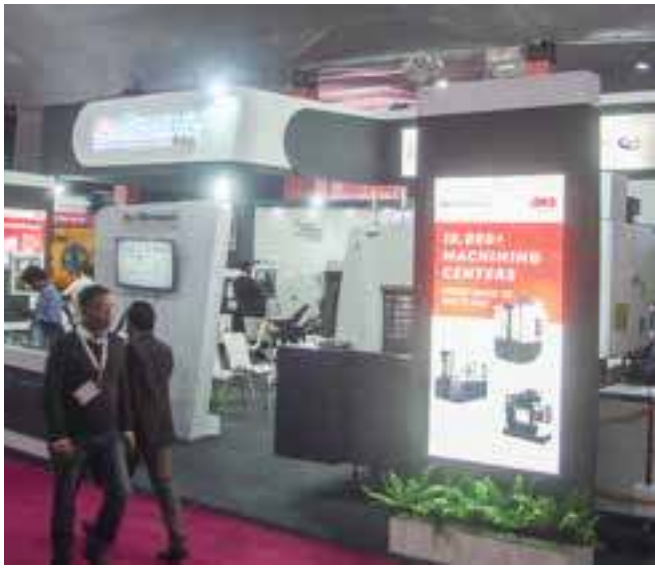

EXHIBITION
DOMESTIC & INTERNATIONAL

PlastIndia 2018

Organiser: Plast India Foundation

Venue: Ahmedabad, Gujarat

Date: Feb 07–12, 2018

Ace Micromatic Group participated in the 10th edition of PlastIndia exhibition, which is one of the largest Plastic expositions in the world to promote growth of the plastics industry within India and across the globe. The Group exhibited its CNC Pipe Turning Machine with Robot Automation.

Jamnagar Tech-Fest 2018

Organiser: GIDC Plot & Shed Holder's Association (Dared) and Sunline Infotech Event India

Venue: Jamnagar, Gujarat

Date: Jan 05–08, 2018

The expo was held at an ideal location of Gujarat where the industry product units are more than 10,000. Ace Micromatic Group made the most of it and displayed products with latest technology including CNC Turning Centre– Colt LM, Apollo; Sliding Head Automat - SHA 20, CNC Machining Centre - Spark XL; Real-Time OEE; Smart Manufacturing IoT; & Industry 4.0 Solutions.

Hi-Tech Expo 2018

Organiser: MSME Development Institute, Agra in association with National Chamber of Industries & Commerce, Agra, UP

Date: Feb 15–16, 2018

Hi-Tech Expo 2018 played a gracious host to Ace Micromatic Group that showcased what it specializes in – CNC Turning centres, CNC Machining centres, CNC Grinding Machines, and Automation solutions.

CUSTOMER MEET
& INTERACTIVE SEMINAR

Events

Interactive Seminar

Venue: Bengaluru, Karnataka

Date: Oct 27, 2017

Topic: Application of IoT & High Speed Productive Solution for Machining of Auto Components

Interactive Joint Seminar with TaeguTec

Venue: Aligarh, UP

Date: Oct 28, 2017

Topic: High Productive CNC Machines and Cutting Tools

Customer Meet and Interactive Seminar

Venue: Chennai, Gummidipoondi

Date: Nov 11, 2017

Topic: Latest Developments in CNC Machining Technology & Implementation of Industry 4.0 - IoT Auto Components

CUSTOMER MEET
& INTERACTIVE SEMINAR

Customer Meet and Interactive Seminar

Venue: Vishakhapatnam, Andhra Pradesh

Date: Nov 15, 2017

Topic: Latest Developments in CNC Machining Technology & Implementation of Industry 4.0 - IoT

Customer Meet and Interactive Seminar

Venue: Ahmednagar, Maharashtra

Date: Nov 17, 2017

Topic: Latest Developments in CNC Machining Technology & Implementation of Industry 4.0 - IoT

Customer Meet and Interactive Seminar

Venue: Chennai, Tamil Nadu

Date: Jan 19, 2018

Topic: Corporate & Large Scale.

CNC+Plus

SALES AND SERVICES
CONTACT DETAILS

INDIA

NORTH

Delhi
T: +91 11 22414232
E: mmtdel@acemicromatic.com

Gurgaon
T: +91 124 4745500
E: mmtdel@acemicromatic.com

Rohtak
T: +91 99966 91055
E: mmtdel@acemicromatic.com

Faridabad
T: +91 129 4047000
E: mmtdel@acemicromatic.com

Ludhiana
T: +91 97791 78296
E: pjbsales@acemicromatic.com

Rudrapur
T: +91 97201 06532
E: mmtukd@acemicromatic.com

EAST

Jamshedpur
T: +91 657 2383750
E: mmtcal@acemicromatic.com

Kolkata
T: +91 98301 10933
E: mmtcal@acemicromatic.com

WEST

Ahmedabad
T: +91 99242 89892
E: mmtbom@acemicromatic.com

Pune - Chakan
T: +91 21 35322002
E: mmtpune@acemicromatic.com

Mumbai - Thane
T: +91 22 25829062
E: mmtbom@acemicromatic.com

Aurangabad
T: +91 240 2552309
E: mmtaur@acemicromatic.com

Pune - Chinchwad
T: +91 98906 23217 / +91 20 40712111
E: mmtpune@acemicromatic.com

Pune - Shirur
T: +91 98906 23217
E: mmtpune@acemicromatic.com

Indore
T: +91 73899 39190
E: mmtindr@acemicromatic.com

Kolhapur
T: +91 98906 23202 Service 95030 40941
E: mmtkop@acemicromatic.com

Rajkot
T: +91 281 6548369
E: mmtraj@acemicromatic.com

Nasik
T: +91 253 6610254
E: mmtbom@acemicromatic.com

Mumbai
T: +91 22 26861009
E: mmtbom@acemicromatic.com

SOUTH

Bangalore
T: +91 80 40200555
E: mmtblr@acemicromatic.com

Chennai - Sriperumbudur
T: +91 98407 85520
E: mmtche@acemicromatic.com

Ranipet
T: +91 98407 85521
E: mmtrpt@acemicromatic.com

Bangalore - Bommasandra
T: +91 80 27834836
E: mmtbms@acemicromatic.com

Chennai - Tambaram
T: +91 98407 85523
E: mmtche@acemicromatic.com

Trichy
T: +91 431 2443066
E: mmttry@acemicromatic.com

Belgaum
T: +91 99800 02597
E: mmtbgm@acemicromatic.com

Coimbatore
T: +91 98432 65430
E: mmtcbe@acemicromatic.com

Chennai - Ambattur
T: +91 98407 85520
E: mmtche@acemicromatic.com

Hyderabad
T: +91 40 23070496
E: mmthyd@acemicromatic.com

INTERNATIONAL

Germany
T: +49 1722316688
E: debjoyr@acemicromatic.com

China (Shanghai)
T: +86 (21) 5866 5031/32
E: raguramachandranc@acemicromatic.com

OUR NETWORK

CHANDIGARH
LUDHIANA
RUDRAPUR
ROHTAK
NEW DELHI
GURGAON
FARIDABAD
AHMEDABAD
RAJKOT
INDORE
JAMSHEDPUR
KOLKATA
NASIK
AURANGABAD
MUMBAI
THANE
CHAKAN
PUNE
HYDERABAD
YADRAV
KOLHAPUR
BELGAUM
AMBATTUR
SRIPERUMBUDUR
CHENNAI
RANIPET
TAMBARAM
BOMMASANDRA
BANGALORE
COIMBATORE
TRICHY
TECH CENTRE

Micromatic Machine Tools Pvt Ltd

#240/241, 11th Main, 3rd Phase,
Peenya Industrial Area,
Bangalore – 560 058

T : +91 80 40200555
E : connect@acemicromatic.com

www.acemicromatic.net

/acemicromaticgroup

/user/acemicromatic

/goo.gl/TLPMQT